Data Sheet

Article number: 54300912
Description: LDK Rod end POS 12

Measures

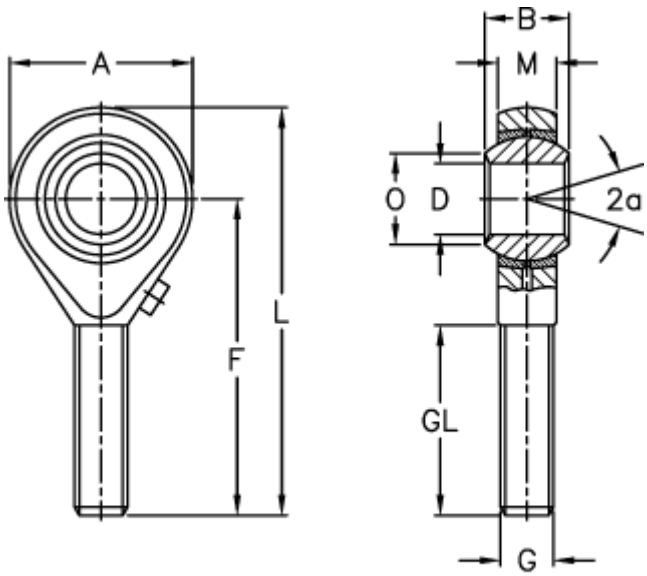

A	= 30	L	= 69
a (degrees)	= 13	M	= 12.00
B	= 16	O	= 15.40
D	= 12	Static load C0 (kN)	= 22.8
Dynamic load C (kN)	= 10.0	Weight (g)	= 85
F	= 54		
g	= M12		
GL	= 33		

Product drawings and brochures of any kind may contain errors for which Brd. Klee A/S cannot be liable.